Pocket system for pivoting, folding and lateral sliding in of wooden doors up to 20 kg (44 lbs.). Uniform, flush front design with even gap pattern. Invisible technology. Pull version with handle.

Product highlights

Flexibility Variable door dimensions for floor-to-ceiling, walk-in closets and composed cabinets – can be flexibly combined with the Hawa Concepta III

Productivity Easy installation thanks to high degree of pre-assembly and intuitive adjustment

Comfort Opening and closing with very little effort – one hand is enough

Technical specifications

6–20 kg (13 to 44 lbs.)

1200–2200 mm (3' 11 1/4'' to 7' 2 5/8'')

350–750 mm (1' 1 25/32'' to 2' 5 17/32'')

18–26 mm (23/32'' to 1 1/32'')

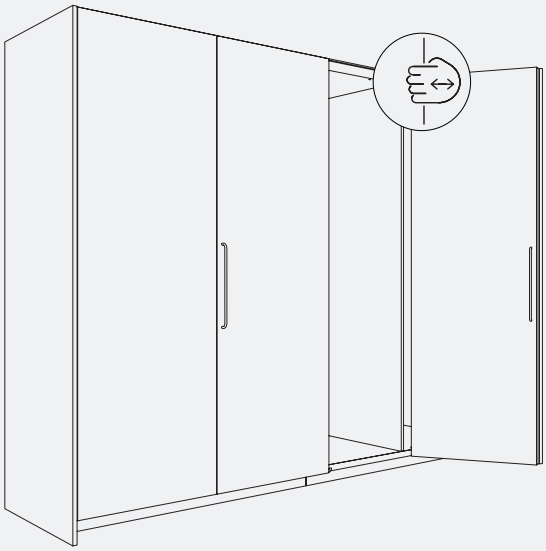

Installation examples
Overlay door without base profile

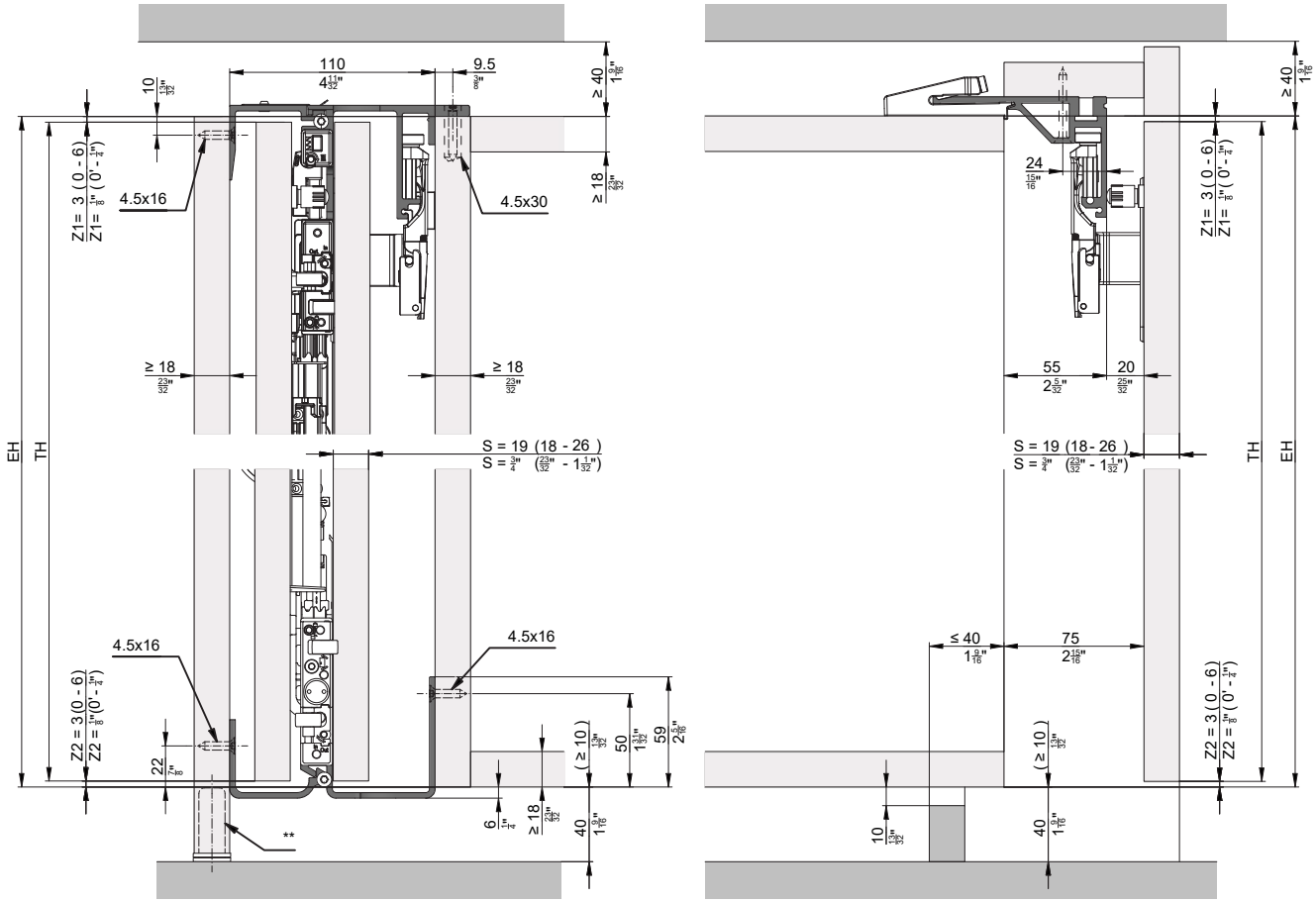

** Recommendation: Use adjustable foot

Overlay door without base profile, 2 and 4 doors

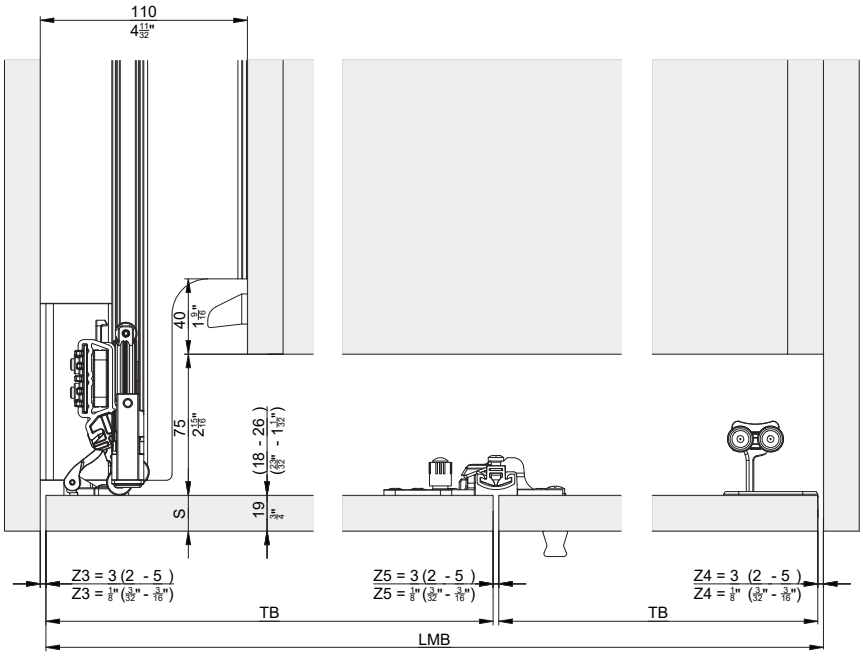

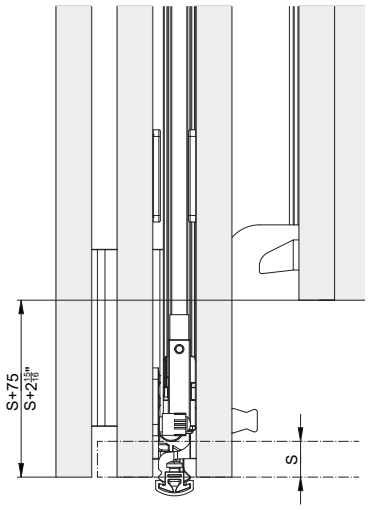

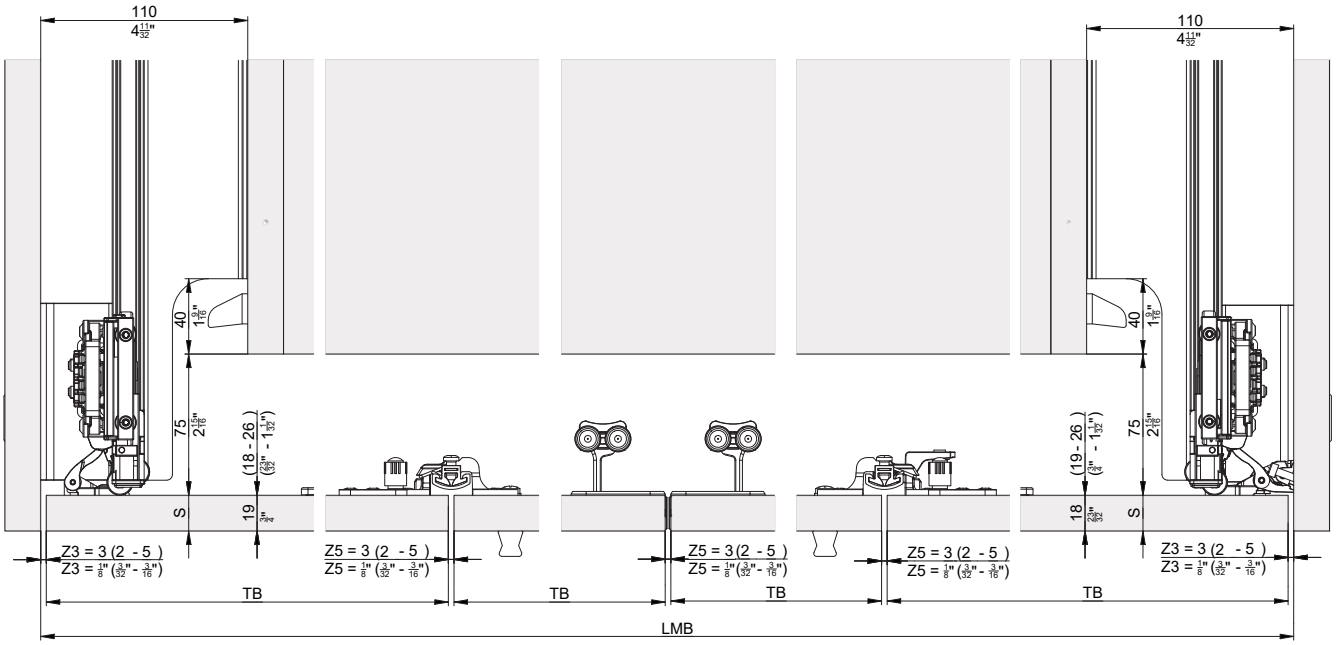

Subject to technical modifications. Metric specifications are exact. Inches are approximate.

2- and 4-door cabinets

Required components		Aluminum, anodized						Aluminum, black anodized					
		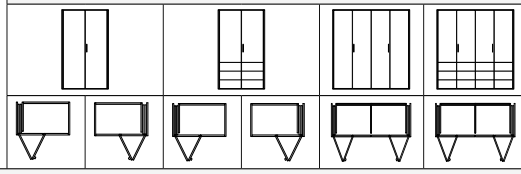						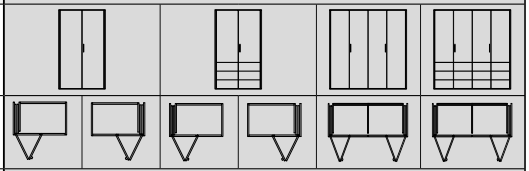					
Sets													
53442	Hawa Folding Concepta III V2 20 Pull, set, left	1		1		1	1	1		1		1	1
53443	Hawa Folding Concepta III V2 20 Pull, set, right		1		1	1	1		1		1	1	1
Track set cabinet													
53446	Hawa Folding Concepta III V2, track set, cabinet, left, floor connection	1				1		1				1	
53447	Hawa Folding Concepta III V2, track set, cabinet, right, floor connection		1			1			1			1	
53448	Hawa Folding Concepta III V2, track set, cabinet, left, composed cabinet			1			1			1			1
53449	Hawa Folding Concepta III V2, track set, cabinet, right, composed cabinet				1		1				1		1
Track set front													
53450	Hawa Folding Concepta III V2, track set, front, 2 doors, left, aluminum, anodized	1		1									
53451	Hawa Folding Concepta III V2, track set, front, 2 doors, right, aluminum, anodized		1		1								
53454	Hawa Folding Concepta III V2, track set, front, 4 doors, aluminum, anodized					1	1						
53455	Hawa Folding Concepta III V2, track set, front, 2 doors, left, black anodized							1		1			
53456	Hawa Folding Concepta III V2, track set, front, 2 doors, right, black anodized								1		1		
53459	Hawa Folding Concepta III V2, track set, front, 4 doors, black anodized											1	1
Upright set													
31519	Hawa Folding Concepta III 20, upright set, door height 1200–2200 mm, aluminum, anodized	1	1	1	1	2	2						
31526	Hawa Folding Concepta III 20, upright set, door height 1200–2200 mm, aluminum, black anodized							1	1	1	1	2	2
Accessories													
52726	Running track adapter with depth adjustment for 4-door composed cabinet, door widths larger than 550 mm					1	1					1	1
52109	Reinforcement profile for running track, front, 2765 mm, 4 doors, aluminum, anodized					1	1					1	1

Hawa Configurator

www.hawa.com/configurator →

3-door cabinets

Required components		Aluminum, anodized				Aluminum, black anodized			
		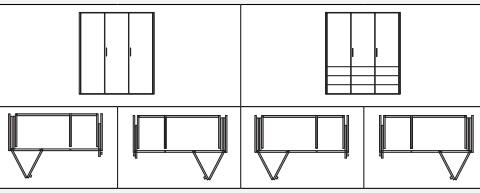				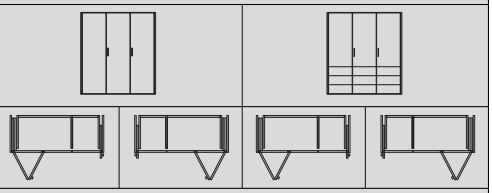			
Sets									
53442	Hawa Folding Concepta III V2 20 Pull, set, left	1		1		1		1	
53443	Hawa Folding Concepta III V2 20 Pull, set, right		1		1		1		1
Track set cabinet									
53446	Hawa Folding Concepta III V2, track set, cabinet, left, floor connection	1				1			
53447	Hawa Folding Concepta III V2, track set, cabinet, right, floor connection		1				1		
53448	Hawa Folding Concepta III V2, track set, cabinet, left, composed cabinet			1				1	
53449	Hawa Folding Concepta III V2, track set, cabinet, right, composed cabinet				1				1
Track set front									
53452	Hawa Folding Concepta III V2, track set, front, 3 doors, left, aluminum, anodized	1		1					
53453	Hawa Folding Concepta III V2, track set, front, 3 doors, right, aluminum, anodized		1		1				
53457	Hawa Folding Concepta III V2, track set, front, 3 doors, left, black anodized					1		1	
53458	Hawa Folding Concepta III V2, track set, front, 3 doors, right, black anodized						1		1
Upright set									
31519	Hawa Folding Concepta III 20, upright set, door height 1200–2200 mm, aluminum, anodized	1	1	1	1				
31526	Hawa Folding Concepta III 20, upright set, door height 1200–2200 mm, aluminum, black anodized					1	1	1	1
Sets									
30994	Hawa Concepta III V2 25 Push/Pull, basic set, left, door height 1200–2200 mm		1		1		1		1
30995	Hawa Concepta III 25 V2 Push/Pull, basic set, right, door height 1200–2200 mm	1		1		1		1	
Slide-in sets									
31000	Hawa Concepta III V2 25/35 Pull, slide-in set, left		1		1		1		1
31001	Hawa Concepta III V2 25/35 Pull, slide-in set, right	1		1		1		1	
Upright profile									
30778	Upright profile, for door height 1200–2200 mm, aluminum, anodized, L= 1974 mm	1	1	1	1	1	1	1	1
Accessories									
52110	Reinforcement profile for running track, front, 2085 mm, 3 doors, aluminum, anodized	1	1	1	1	1	1	1	1

Subject to technical modifications. Metric specifications are exact. Inches are approximate.

List of individual parts, which are included in the sets

Pull set for 1 folding/slide-in door up to 20 kg (44 lbs.)

	No.
Hawa Folding Concepta III V2 20 Pull, set, left	53442
Hawa Folding Concepta III V2 20 Pull, set, right	53443

Set consisting of:		53442	53443	No.
	Slide-in unit Hawa Folding Concepta III V2 Pull, left	1		53480
	Soft closing mechanism	1	1	31222
	End stop bracket Pull, steel, zinc-plated	1	1	31541
	Slide-in securing mechanism, plastic, black	1	1	53429
	Mounting plate for hinge with height adjustment, steel	1	1	52616
	Slot nuts for hinge attachment, plastic, black	3	3	30686
	Concealed hinge, with soft closing mechanism and closing spring, steel, nickel plated	3	3	52621
	Center concealed hinge, not spring loaded, steel, matt nickel-plated	3	3	31362
	Folding running gear hinge	1	1	53563
	Folding running gear	1	1	31313
	Stop buffer adjustable, plastic, anthracite	1	1	31550
	Screws for concealed hinges and center concealed hinges, 4x16 mm (5/32''x 5/8''), set of 22 pieces	1	1	53474
	Slide-in unit Hawa Folding Concepta III V2 Pull, right		1	53479

Matching track set, cabinet, floor connection

	No.
Hawa Folding Concepta III V2, track set, cabinet, left, floor connection	53446
Hawa Folding Concepta III V2, track set, cabinet, right, floor connection	53447

Set consisting of:		53446	53447	No.
	Double running track, top left, aluminum, anodized, L= 820 mm (2' 8 9/32'')	1		31339
	Guide track, bottom left, aluminum, anodized, L= 820 mm (2' 8 9/32'')	1		31336
	Connector, top left L=788 mm (2' 7 1/32'')	1		31370
	Connecting profile for Connector, top, aluminum, L = 500 mm (1' 7 11/16'')	1	1	30977
	Connector clips, bottom, plastic, black, L= 94 mm (3 11/16'')	3	3	31086
	Track support and connector part for running track curve	1	1	31543
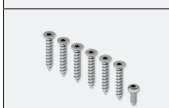	Screw set for double running track and Connector attachment at the bottom	1	1	31530
	Screws for cabinet rail set, floor connection, 4.5x16 mm (5/32''x 5/8''), set of 24 pieces	1	1	53477
	Double running track, top right, aluminum, anodized, L= 820 mm (2' 8 9/32'')		1	31340
	Guide track, bottom right, aluminum, anodized, L= 820 mm (2' 8 9/32'')		1	31337
	Connector, top right L= 788 mm (2' 7 1/32'')		1	31371

Matching track set, cabinet, composed cabinet

	No.
Hawa Folding Concepta III V2, track set, cabinet, left, composed cabinet	53448
Hawa Folding Concepta III V2, track set, cabinet, right, composed cabinet	53449

Set consisting of:

		53448	53449	No.
	Double running track , top left, aluminum, anodized, L= 820 mm (2' 8 9/32'')	1		31339
	Guide track for composed cabinet, left, aluminum, anodized, L= 820 mm (2' 8 9/32'')	1		52718
	Mounting bracket for guide track, steel, composed cabinet	3	3	52719
	Connector, top left L= 788 mm (2' 7 1/32'')	1		31370
	Connecting profile for Connector, top, aluminum, L = 500 mm (1' 7 11/16'')	1	1	30977
	Track support and connector part for running track curve	1	1	31543
	Screw set, including thread rolling screws for the guide rail and top cabinet	1	1	53431
	Screw set for double running track, 4.5x30 mm (3/16''x 1 3/16''), set of 6 pieces	1	1	53476
	Screws for cabinet rail set, composed cabinet, 4.5x16 mm (3/16''x 5/8''), set of 13 pieces	1	1	53478
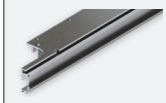	Double running track, top right, aluminum, anodized, L= 820 mm (2' 8 9/32'')		1	31340
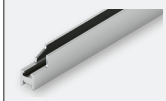	Guide track for composed cabinet, right, aluminum, anodized, L= 820 mm (2' 8 9/32'')		1	52720
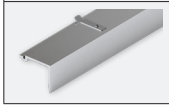	Connector, top right L= 788 mm (2' 7 1/32'')		1	31371

Composed cabinet

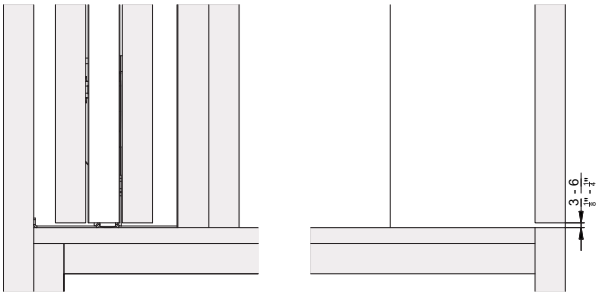

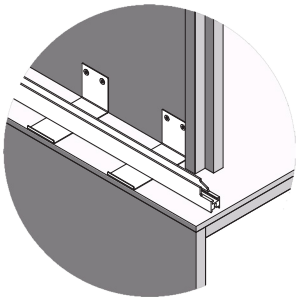

Subject to technical modifications. Metric specifications are exact. Inches are approximate.

Matching track set, 2-door and 4-door fronts, aluminum, anodized

	No.
Hawa Folding Concepta III V2, track set, front, 2 doors, left, aluminum, anodized	53450
Hawa Folding Concepta III V2, track set, front, 2 doors, right, aluminum, anodized	53451
Hawa Folding Concepta III V2, track set, front, 4 doors, aluminum, anodized	53454

Set consisting of:		53450	53451	53454	No.
	Running track front, aluminum, anodized, L= 1272 mm (4' 2 3/32")	1	1		31210
	Running track curve, left, aluminum,anodized, with plastic guide	1		1	53534
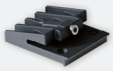	Running track adapter, plastic, anthracite, set of 3 pieces	1	1		53471
	Running track curve, right, aluminum, anodized, with plastic guide		1	1	53535
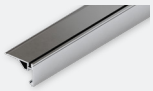	Running track front, aluminum, anodized, L= 2539 mm (8' 3 31/32")			1	31343
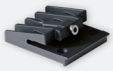	Running track adapter, plastic, anthracite, set of 5 pieces			1	53473

Upright set, aluminum, anodized

	No.
Hawa Folding Concepta III 20, upright set, door height 1200–2200 mm (3' 11 1/4''– 7' 2 5/8''), aluminum, anodized	31519

Set consisting of:		31519	No.
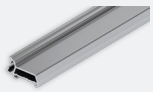	Upright profile, for door height 1200–2200 mm (3' 11 1/4''– 7' 2 5/8''), aluminum, anodized, L= 1974 mm (6' 5 23/32'')	1	30778
	Cover panel for door joint, for door height 1200–2200 mm (3' 11 1/4''– 7' 2 5/8''), aluminum, anodized, L= 2200 mm (7' 2 5/8'')	1	31230
	Retaining clip for cover panel 2200 mm (7' 2 5/8''), plastic, black, set of 6 pieces	1	31502

Matching track set, 3-door front, aluminum, anodized

	No.
Hawa Folding Concepta III V2, track set, front, 3 doors, left, aluminum, anodized	53452
Hawa Folding Concepta III V2, track set, front, 3 doors, right, aluminum, anodized	53453

Set consisting of:		53452	53453	No.
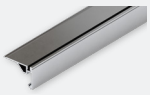	Running track front, aluminum, anodized, L= 1954 mm (6' 4 15/16'')	1	1	31341
	Running track curve, left, aluminum, anodized, with plastic guide	1		53534
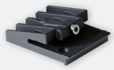	Running track adapter, plastic, anthracite, set of 4 pieces	1	1	53472
	Stop set 3 doors Push/Pull	1	1	31538
	Running track curve, right, aluminum, anodized, with plastic guide		1	53535

Matching track set, 2-door and 4-door fronts, aluminum, black anodized

	No.
Hawa Folding Concepta III V2, track set, front, 2 doors, left, black anodized	53455
Hawa Folding Concepta III V2, track set, front, 2 doors, right, black anodized	53456
Hawa Folding Concepta III V2, track set, front, 4 doors, black anodized	53459

Set consisting of:

		53455	53456	53459	No.
	Running track front, aluminum, black anodized, L= 1272 mm (4' 2 3/32")	1	1		31211
	Running track curve, left, aluminum, black anodized, with plastic guide	1		1	53536
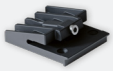	Running track adapter, plastic, anthracite, set of 3 pieces	1	1		53471
	Cover-up pen for cut edge, black	1	1	1	52117
	Running track curve, right, aluminum, black anodized, with plastic guide		1	1	53537
	Running track front, aluminum, black anodized, L= 2539 mm (8' 3 31/32")			1	31344
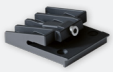	Running track adapter, plastic, anthracite, set of 5 pieces			1	53473

Upright set, aluminum, black anodized

	No.
Hawa Folding Concepta III 20, upright set, door height 1200–2200 mm (3' 11 1/4"– 7' 2 5/8"), aluminum, black anodized	31526

Set consisting of:

		31526	No.
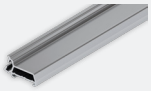	Upright profile, for door height 1200–2200 mm (3' 11 1/4"– 7' 2 5/8"), aluminum, anodized, L= 1974 mm (6' 5 23/32")	1	30778
	Cover panel for door joint, for door height 1200–2200 mm (3' 11 1/4"– 7' 2 5/8"), aluminum, black anodized	1	31231
	Retaining clip for cover panel 2200 mm (7' 2 5/8"), plastic, black, set of 6 pieces	1	31502

Matching track set, 3-door front, aluminum, black anodized

	No.
Hawa Folding Concepta III V2, track set, front, 3 doors, left, black anodized	53457
Hawa Folding Concepta III V2, track set, front, 3 doors, right, black anodized	53458

Set consisting of:

		53457	53458	No.
	Running track front, aluminum, black anodized, L= 1954 mm (6' 4 15/16")	1	1	31342
	Running track curve, left, aluminum, black anodized, with plastic guide	1		53536
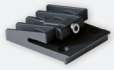	Running track adapter, plastic, anthracite, set of 4 pieces	1	1	53472
	Stop set 3 doors Push/Pull	1	1	31538
	Cover-up pen for cut edge, black	1	1	52117
	Running track curve, right, aluminum, black anodized, with plastic guide		1	53537

Reinforcement profiles

		mm (inch)	No.
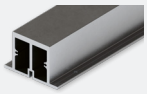	Reinforcement profile for running track, front, 2765 mm (9' 27/32"), 4 doors, aluminum, anodized	2,765 (9' 27/32")	52109
	Reinforcement profile for running track, front, 2085 mm (6' 10 3/32"), 3 doors, aluminum, anodized	2,085 (6' 10 3/32")	52110

Base profiles

		No.
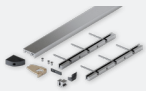	Base profile set, 2 doors, aluminum, anodized	52089
	Base profile set, 3 doors, aluminum, anodized	52090
	Base profile set, 4 doors, aluminum, anodized	52091
	Base profile set, 2 doors, aluminum, black anodized	52092
	Base profile set, 3 doors, aluminum, black anodized	52093
	Base profile set, 4 doors, aluminum, black anodized	52094

Subject to technical modifications. Metric specifications are exact. Inches are approximate.

Accessories

		No.
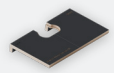	Routing jig for folding hinge	52121
	Magnetic centering part, with drilling jig, aluminium, anodized	24006
	Running track adapter with depth adjustment for 4-door composed cabinet, door widths larger than 550 mm (1' 9 21/32'')	52726
	Allen key, with handle, 3 mm (1/8'')	13164
	Allen key 4 mm, length 160 mm(6 5/16'')	19931

Automatic shut-off device

In order to ensure that electrical devices are safely shut off when doors are closed, we recommend the Hawa-specific SafetyBox from Halemeier, which is suitable for the entire Hawa Concepta III family.
www.halemeier.de

Magnetic centering parts

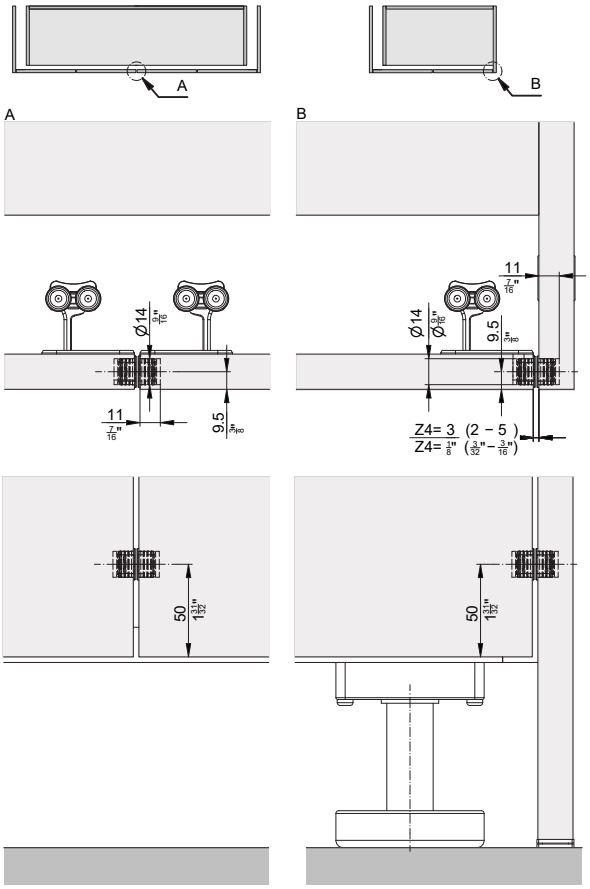

Straightening fitting

→ Details under accessories frome page 307

Aluminum, untreated

	No.
Straightening fitting for doors 1715–2275 mm (5' 7 17/32''– 7' 5 9/16''), aluminum, can be shortened for doors smaller than 1715 mm (5' 7 17/32''), set of 2 pieces	056.3192.079
Straightening fitting for doors 1215–1775 mm (3' 11 27/32''–5' 9 27/32''), aluminum, can be shortened for doors smaller than 1215 mm (3' 11 27/32''), set of 2 pieces	056.3192.073

Aluminum, anodized

	No.
Straightening fitting for doors 1715–2275 mm (5' 7 17/32''–7' 5 9/16''), aluminum, anodized, can be shortened for doors smaller than 1715 mm (5' 7 17/32''), set of 2 pieces	056.3192.080

Aluminum, black anodized

	No.
Straightening fitting for doors 1715–2275 mm (5' 7 17/32''–7' 5 9/16''), aluminum, black anodized, can be shortened for doors smaller than 1715 mm (5' 7 17/32''), set of 2 pieces	056.3192.081
Straightening fitting for doors 1215–1775 mm (3' 11 27/32''–5' 9 27/32''), aluminum, black anodized, can be shortened for doors smaller than 1215 mm (3' 11 27/32''), set of 2 pieces	056.3192.076

Hawa Straightening fitting

Aluminum, untreated (without cover caps)

Aluminum, anodized (with cover caps)

Aluminum, black anodized (with cover caps)

Further installation examples
Composed cabinet overlay, 2 and 4 doors

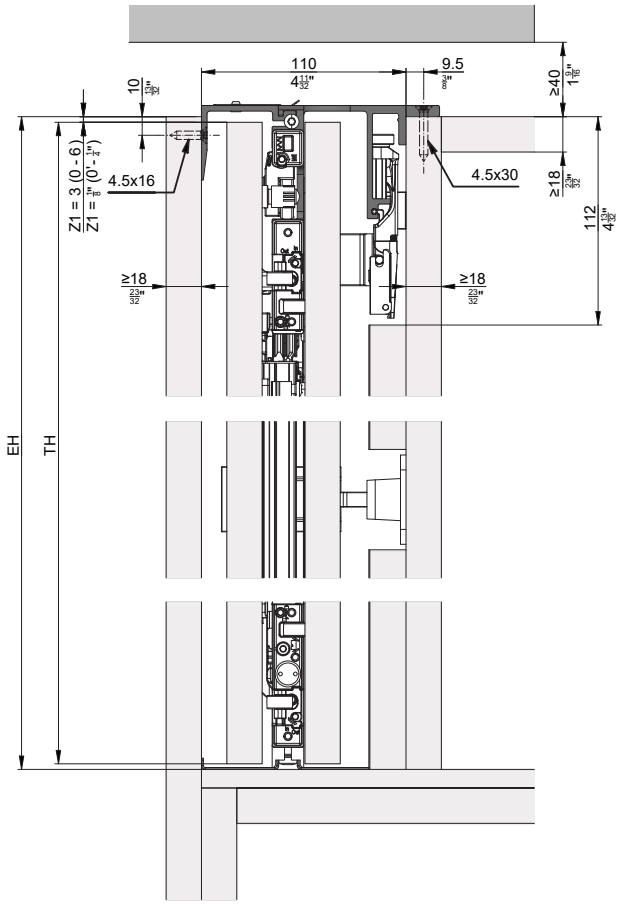

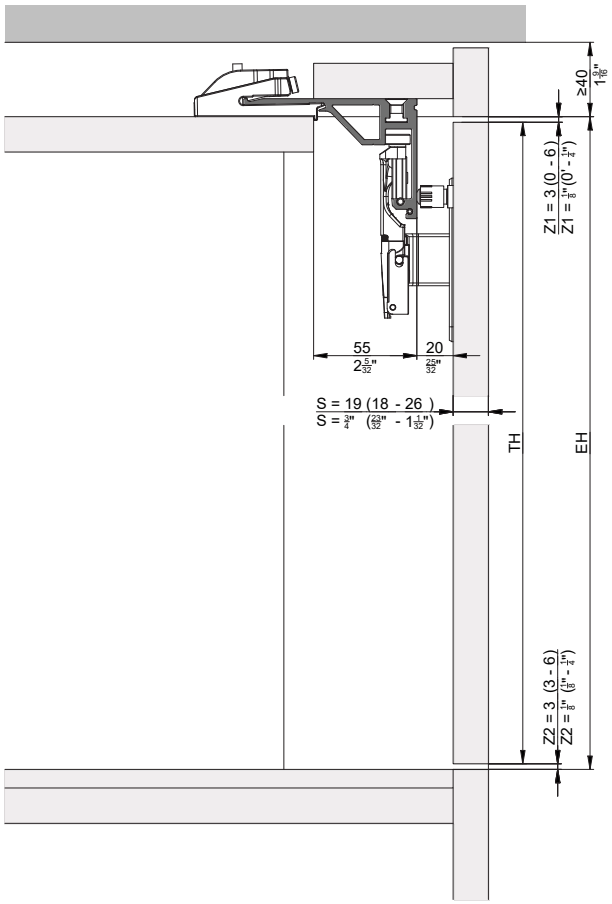

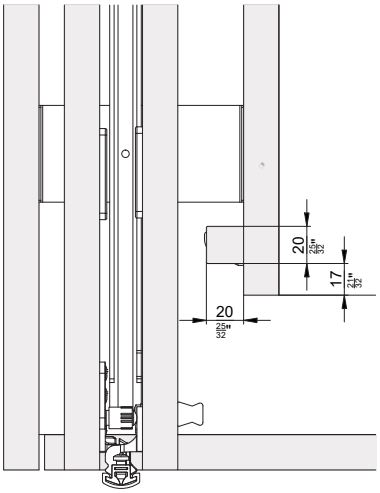

Subject to technical modifications. Metric specifications are exact. Inches are approximate.

Floor-to-ceiling doors without base panels, 2 doors and 4 doors

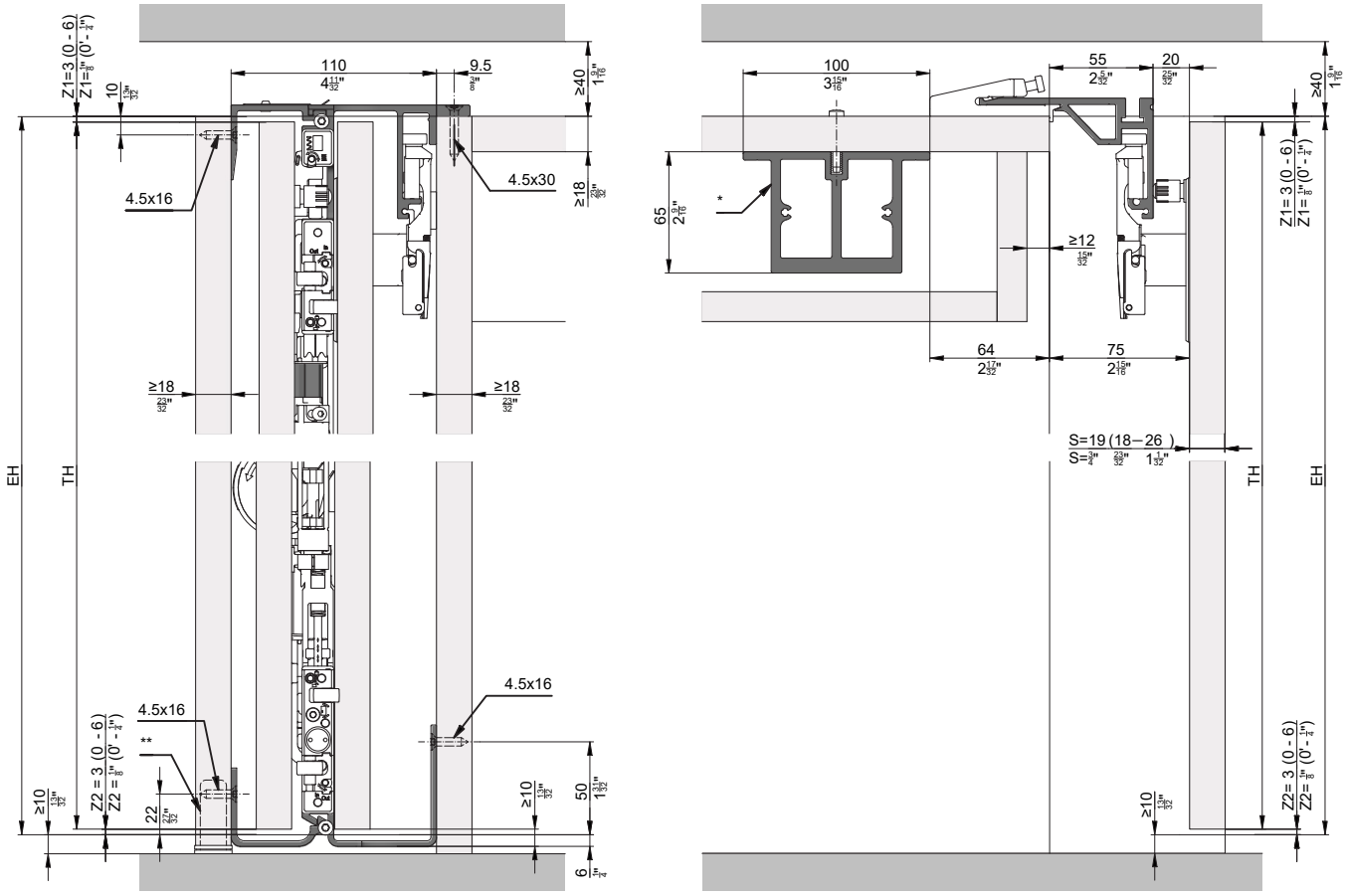

* Reinforcement profile for 3-door and 4-door systems without separating walls

** Recommendation: Use adjustable foot

Overlay door without base profile, 3 doors

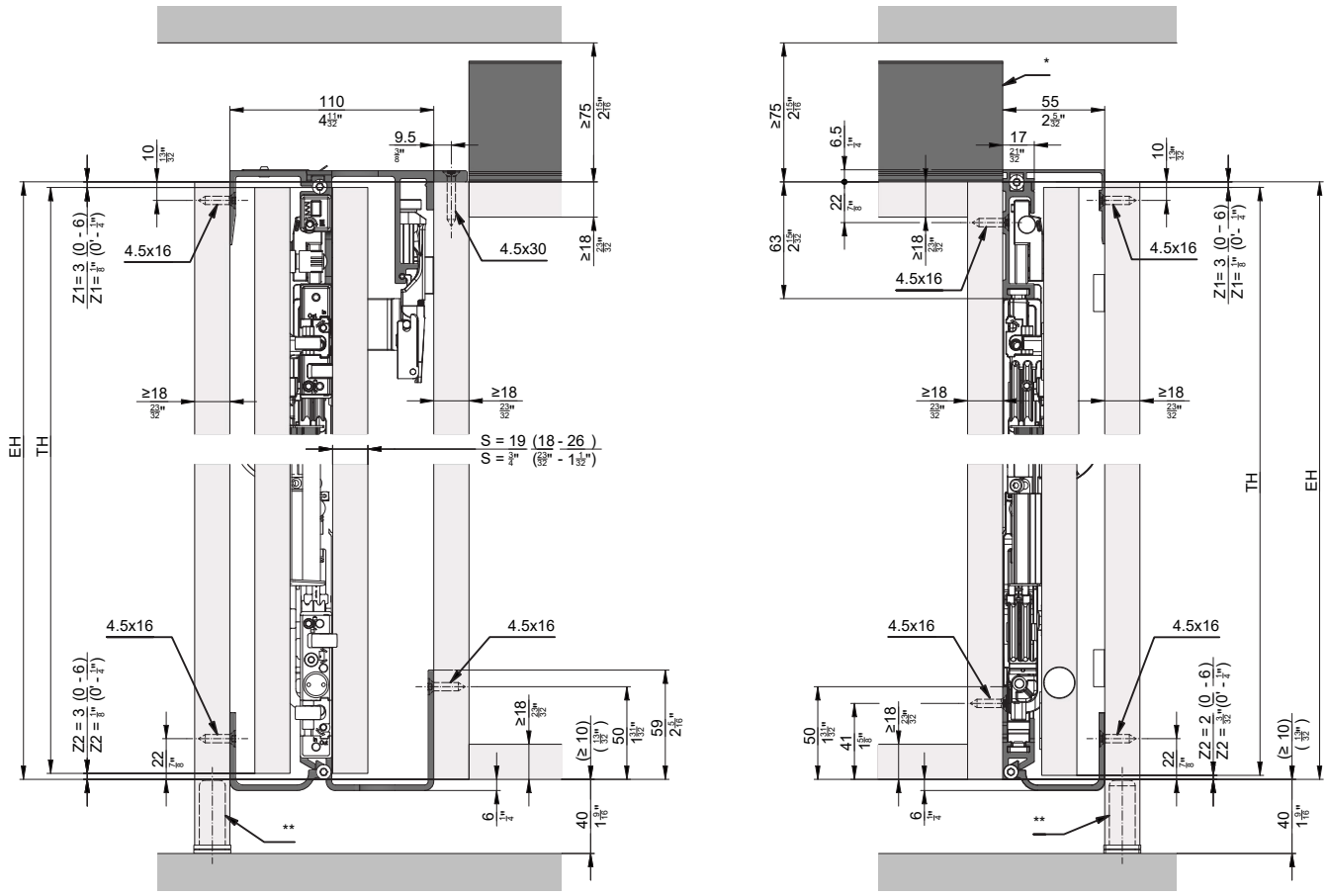

* Reinforcement profile for 3-door and 4-door systems without separating walls
** Recommendation: Use adjustable foot

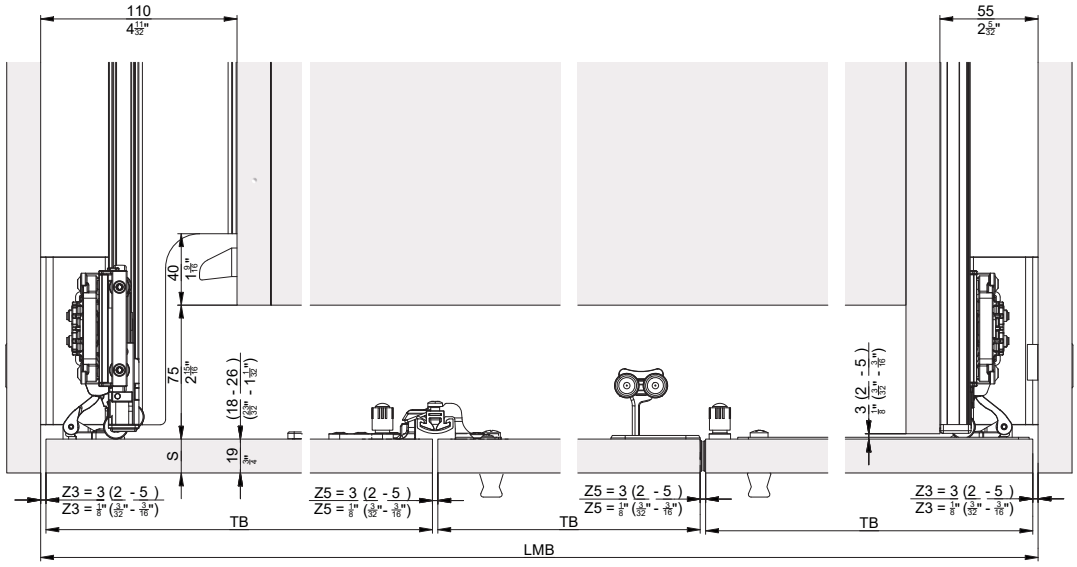

Subject to technical modifications. Metric specifications are exact. Inches are approximate.

Overlay door with base profile, 2 and 4 doors

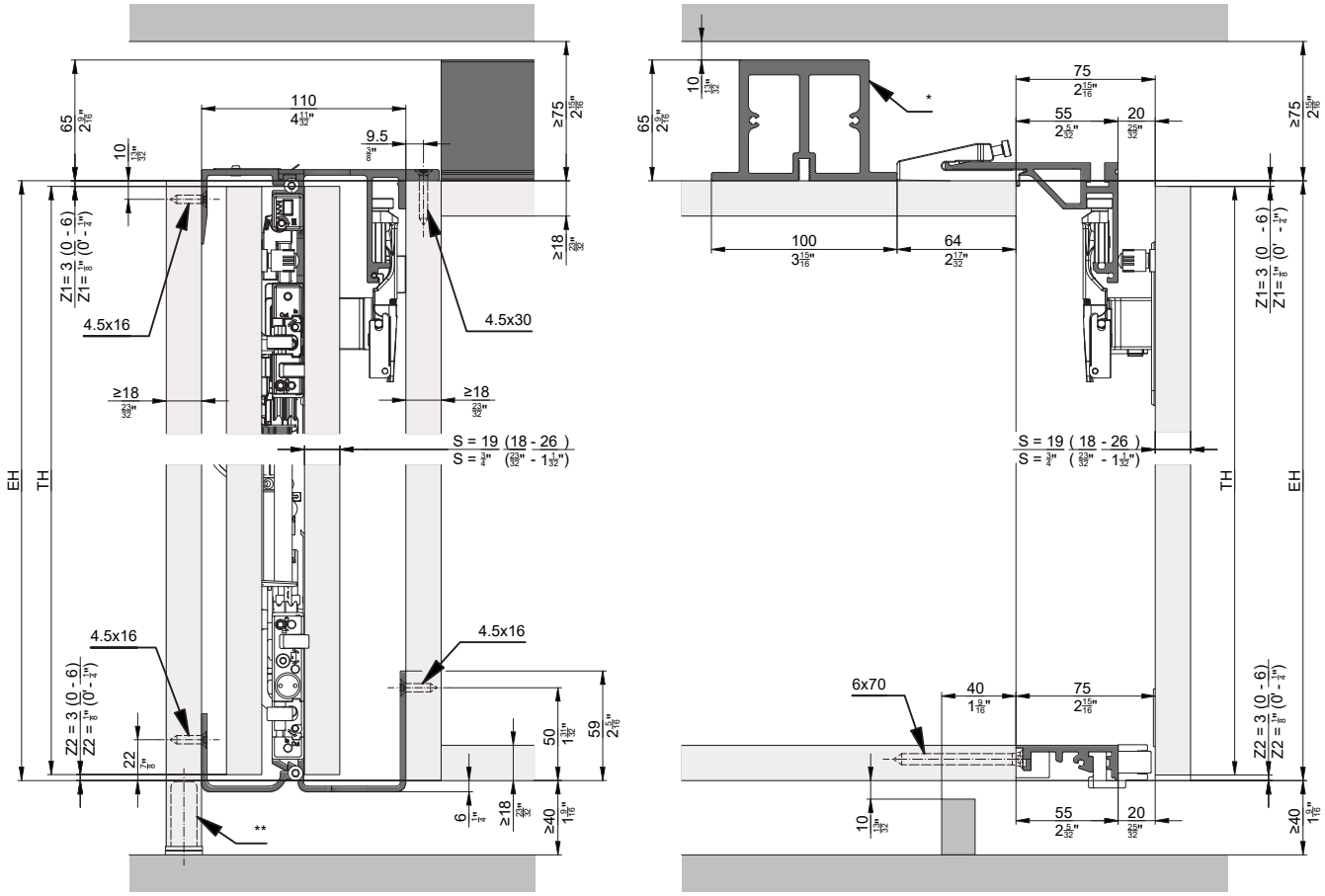

* Reinforcement profile for 3-door and 4-door systems without separating walls

** Recommendation: Use adjustable foot

Hardware depth calculation

Flush door

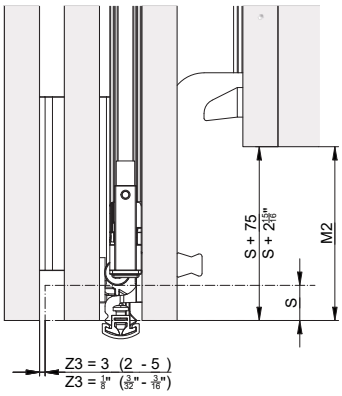

Protruding door

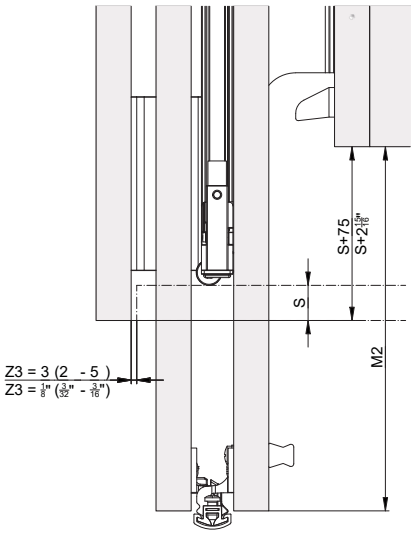

	mm	Inch
T2	TB + 92 + Z3 - M2	TB + 3 3/8" + Z3 - M2
KT2	≥ T2	≥ T2
E2	TB - M2	TB - M2
M2 min.	≥ S + 75	≥ S + 2 15/16"
M2 max.	≤ TB - 250	≤ TB - 9 27/32"

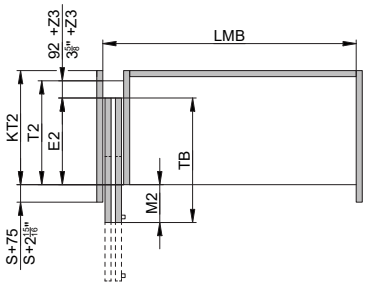

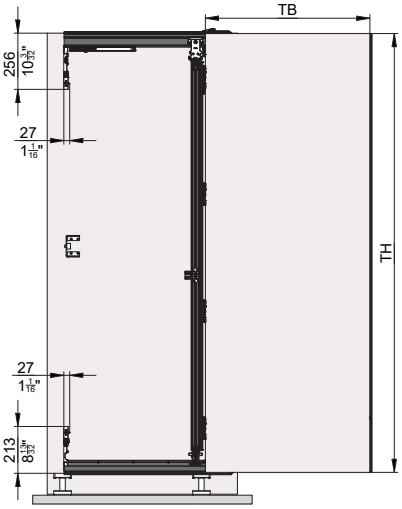

S = Door thickness
Z = Gap size
E2 = Slide-in depth
T2 = Hardware depth
TB = Door width
TH = Door height
KT2 = Cabinet depth
LMB = Inside clearance
M2 = Door projection over cabinet

Instructions

- Left-hand installation →
- Right-hand installation →
- Left-hand adjustment →
- Right-hand adjustment →

Videos

- Installation →
- Adjustment →

Subject to technical modifications. Metric specifications are exact. Inches are approximate.