# LAMP 3-WAY ADJUSTABLE CONCEALED HINGE HES3D-90/HES3D-G90BKT For Glass Door PAT

Latest Info

HES Hinge + Esprit

Passed Private 50K Cycle Test

KIDS DESIGN AWARD 2021

GLASS DOOR BRACKET

- The HES Series is compact.
- With shallow recessed depth, recessing into doors and jambs is easy.
- Using the optional machining jig, recessed machining using a router for wooden doors and jambs is easy.
- With 3-way adjustment function (vertical, horizontal, depth).
- The hinge can be split between the door and jamb.

INSTRUCTION | TEMPERED GLASS | SCREW

### HES3D-90 Included Parts
- Countersunk head screw 4×20 (4 pcs./hinge)
- Hex key 2

### HES3D-G90BKT Included Parts
- Hexagon socket countersunk head screws M5 x 12, cross-recessed countersunk head screws M4 x 12
- Hex key 3

### Optional Parts
- Machining Jig HES3D-90-TMP

### Caution
- Be sure to read the "Precautions for Use" (P.23).
- Cannot be used in conjunction with dampers or stays.

### Door Dimensions and Number of Hinges

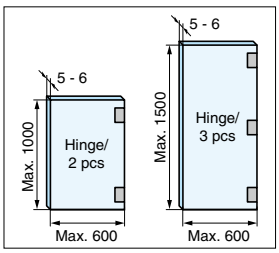


### HES3D-90

Figure shows top screw cover removed.

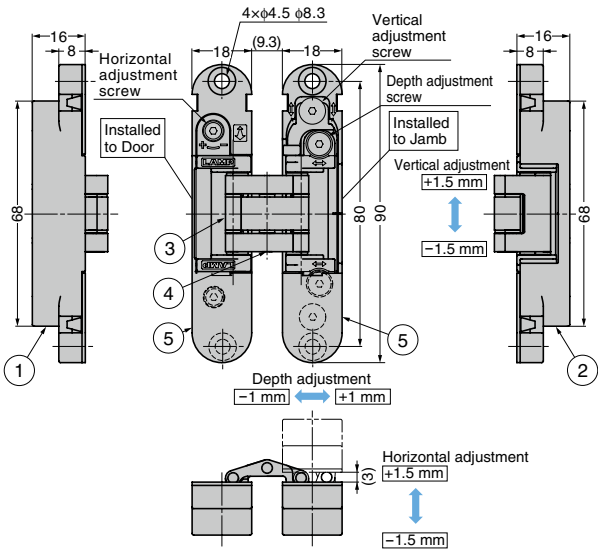


### HES3D-90BKT (GLASS DOOR BRACKET)

Installation | Installation | Selection Tool

Glass Hinge

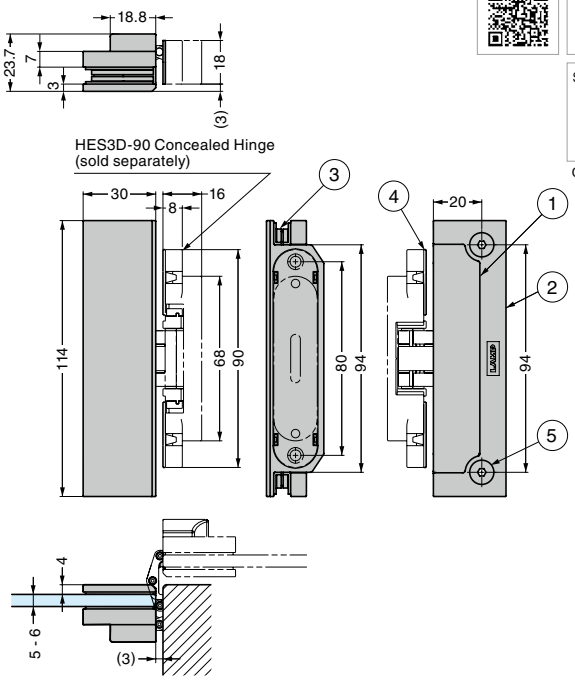


| No. | Part Name | Material | Finish | | |
|---|---|---|---|---|---|
| | | | DC | DN | BL |
| ① | Body | Zinc Alloy (ZDC) | Satin Chrome | Satin Nickel | Black Enamel |
| ② | Base Frame | Zinc Alloy (ZDC) | Satin Chrome | Satin Nickel | Black Enamel |
| ③ | Arm | Zinc Alloy (ZDC) | Satin Chrome | Satin Nickel | Black Enamel |
| ④ | Shaft | Stainless Steel | – | – | – |
| ⑤ | Cover | ABS | Silver | Champagne Gold | Black |

| No. | Part Name | Material | Finish | | |
|---|---|---|---|---|---|
| | | | CR | GP | BL |
| ① | Body | Zinc Alloy (ZDC) | Chrome | 24K Gold plating | Black Enamel Finish |
| ② | Back Plate | | | | |
| ③ | Gasket | Chloroprene Rubber (CR) | – | – | – |
| ④ | Screw Cover | ABS | Chrome | 24K Gold plating | – |
| ⑤ | Hexagon Socket Countersunk Head Screw M5 x 12 | Steel | | | Black Enamel Finish |

### HES3D-90

| Item Code | Item Name | Colour | Door Width | Door Height | Door Thickness | Load Capacity | | Opening Angle | Weight | Box | Carton |
|---|---|---|---|---|---|---|---|---|---|---|---|
| 170-029-221 | HES3D-90DC | Silver | Max. 600 | Max. 1500 | Min. 23 | 12 kgf/2 pcs | 16 kgf/3 pcs | 180˚ | 198 g | 2 pcs | 48 pcs |
| 170-029-222 | HES3D-90DN | Champagne Gold | Max. 600 | Max. 1500 | Min. 23 | 12 kgf/2 pcs | 16 kgf/3 pcs | 180˚ | 198 g | 2 pcs | 48 pcs |
| 170-033-588 | HES3D-90BL | Black | Max. 600 | Max. 1500 | Min. 23 | 12 kgf/2 pcs | 16 kgf/3 pcs | 180˚ | 198 g | 2 pcs | 48 pcs |

### HES3D-G90BKT (GLASS DOOR BRACKET)

| Item Code | Item Name | Colour | Weight (g) | Box (pcs) | Carton (pcs) |
|---|---|---|---|---|---|
| 170-035-802 | HES3D-G90BKT-CR | Silver | 245 | 2 | 24 |
| 170-035-803 | HES3D-G90BKT-GP | Gold | 245 | 2 | 24 |
| 170-035-804 | HES3D-G90BKT-BL | Black | 245 | 2 | 24 |

### Installation Template (Sold Separately)

| Item Code | Item Name | Set Content | Material | Colour |
|---|---|---|---|---|
| 170-029-034 | HES3D-90-TMP | 1 pc (for both doors and jambs) | Methacrylic Resin (PMMA) | Clear |

### Cut Out Dimensions

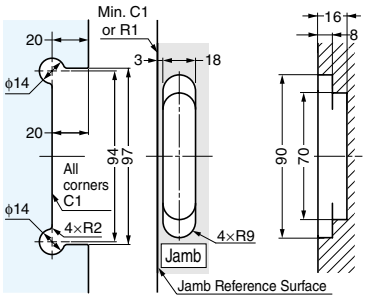


Glass Door Bracket



This information provides a range of quality for the component. It does not ensure the performance or safety of the final product incorporating the component.