Tel: 01626 333900
Email: info@swshardware.com

Hinton Slimline Lever Espag. Lock Set - Polished Chrome

Variant code: 45320

The hinton set is part of the period range of sprung lever handles. A classic Georgian lever that will suit both traditional and contemporary settings.

Our weighty hinton lever handle range is forged from solid brass. the decorative part of the handle highlights all of the hand finishing that is carried out in our factory. A perfect design choice to use throughout your property with many other matching products available.

This handle has a strong double spring incorporated into the stylish boss design to give both functionality & elegance.

- Lever handle for external doors where multi-point locking is required.
- Set includes an internal and external lever espag lock handle.
- Can be used with a multi-point lock or french door kit in conjunction with a euro cylinder.
- Supplied with matching SS bolt through fixings.

Property	Value
Finish	Polished Chrome
Depth (mm)	13
Width (mm)	36
Range	Hinton
Overall Length (mm)	244
Handle Length (mm)	128

SWS HARDWARE

Tel: 01626 333900
Email: info@swshardware.com

Gallery

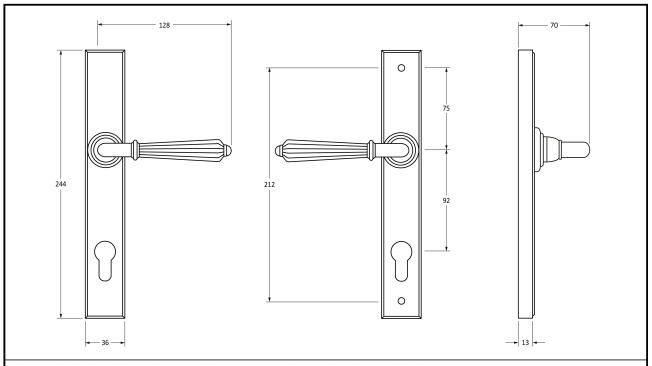

Please Note, due to the hand crafted nature of our products all measurements are approximate and should be used as a guide only.

Product Information		Pack Contents	Fixing Screws	
Product Code:	45314	2 x Handles	Size:	M5 x 90mm
Description:	Hinton Slimline Lever Espag. Lock Set	1 x Split Spindle (8mm x 95mm)	Type:	Dome Head Countersunk Assembly Bolts
Finish:	Aged Brass	1 x Split Spindle (8mm x 125mm)	Finish:	Dark Plating
Base Material:	Brass	1 x Steel Allen Key	Base Material:	Stainless Steel
		2 x Fixing Screws		

From the Anvil
www.fromtheanvil.co.uk